RoomRover- Smart IoT Based Navigation Assistance

Maitreyi Phadke[1], Chinmay Sawant[2], Arya Raut[3],
Gauri Ramekar[4], Sayali Badhan[5]

[1,2,3,4,5*]Computer Science Engineering (AIML),
A.P. Shah Institute of Technology, Thane, 400615, Maharashtra, India.

Contributing authors: maitreyiphadke@gmail.com; chinmayas2005@gmail.com; aryaraut211@gmail.com; gauriramekar1709@gmail.com; spbadhan@apsit.edu.in.

"These authors contributed equally to this work."

Abstract

Indoor systems for monitoring usually decouple physical mobility and intelligent reasoning capabilities, which may confine robot platforms to just movement without contextual intelligence and interactive reasoning capabilities. This paper introduces RoomRover, a unifying autonomous system which combines contextual and smart IoT-based navigation assistance with intelligent cognitive assistance in one single system architecture. The system utilizes a multi-layered infrastructure that combines Internet of Things (IoT) with Retrieval-Augmented Generation (RAG) techniques for contextual responses. At the hardware level, an ESP32-based smart mobile system relies on ultrasonic and MQ2 arrays for obstacle detection and environmental risk detection. Additionally, the system uses cloud-based telemetry services. At the cognitive-level implementation, a voice assistant is integrated based on the STT technique using the FAISS-based semantic retrieval module and a GPT-2-based transformer. Further, the system avoids the computationally heavy implementation of SLAM technology, ensuring a low-latency performance. Apart from the technical contributions of the system, RoomRover works towards safer and more intelligent indoor settings, assistive navigation, detection of hazards, and better accessibility. Knowledge of the system is important in the realization of the globally accepted sustainability requirements with safe communities, infrastructure, and technology-led societal well-being. Scalability of the system is validated with experimentation suitability in smart environments.

Keywords: Autonomous Mobile Robots, IoT Edge Integration, Retrieval Augmented Generation (RAG), ESP32, Speech-to-Text (STT), Hazard Mitigation, Smart Environments.

1. INTRODUCTION

The rapid expansion of the Internet of Things (IoT) has led to a significant growth in autonomous indoor monitoring, shifting from isolated sensor nodes to interconnected intelligent ecosystems. Even though advancements in smart infrastructure have occurred, persistent challenges remain, including the "functional silo" effect, where stationary monitoring systems lack physical agency and mobile robotic platforms often lack advanced interfaces for effective human interaction. This research paper addresses the unified framework that integrates reactive physical mobility with high-level semantic reasoning.

Existing indoor safety protocols for mobile detection primarily utilize fixed sensor deployments. While these systems are often effective for localized detection, they are inherently passive and cannot investigate the source of hazards or provide dynamic guidance during emergencies. In contrast, robotic mobility is generally achieved through Simultaneous Localization and Mapping (SLAM) algorithms; however, most implementations rely heavily on high-fidelity LiDAR and other heavy computational resources, rendering them cost-prohibitive for large-scale deployment in residential or educational environments.

While Large Language Models and voice assistants have greatly advanced natural language understanding, their integration with mobile device hardware is still constrained. This research utilizes Retrieval Augmented Generation (RAG) to address this gap, allowing systems to access localized, domain-specific knowledge bases for context-aware interactions.

This research paper introduces RoomRover, a cost-effective smart indoor assistant designed to address the computational and financial challenges of traditional autonomous navigation. The system employs a modular, two-layer architecture that separates time-critical sensorimotor control and cloud telemetry from higher-order cognitive functions. At the edge layer, an ESP32 microcontroller conducts real-time hazard mitigation using ultrasonic obstacle avoidance and MQ2-based atmospheric monitoring, while maintaining bidirectional communication with a remote dashboard via the Blynk Cloud platform for telemetry synchronization and emergency alerts.

Complementing this, a locally hosted yet offline-capable RAG pipeline supports contextually responsive voice interaction and simulated navigation using a quantized GPT-2 model and FAISS for efficient vector retrieval. Noticeably, the proposed design entirely forgoes SLAM-based mapping in favor of light-weight, reactive spatial awareness. We also make a further contribution to the systematic evaluation of intent classification accuracy and RAG response fidelity under tight memory and latency constraints.

Key Contributions which play a significant role in making the project: Hybrid IoT+ RAG Architecture. This research paper contains a dual-layer system, which is SLAM-free navigation, and also contains real-time hazard detection, along with voice + text interaction and a cloud-based alert system.

2. LITERATURE SURVEY

Due to the recent advancements in autonomous navigation and intelligent robotic systems have significantly influenced indoor mobile robotics. R. Sharma, A. Patel, K. Mehta, and P. Singh [1] discuss the evolution of navigation systems from traditional control methods to deep learning and large language model–based approaches. V. K. G. N. Reddy, V. Prajwal, V. G. N. Reddy, G. S. Srushti, and S. Nirmala [2] highlight IoT sensor integration for autonomous mobile robots. The foundational principles of probabilistic localization and mapping were introduced by Sebastian Thrun, Wolfram Burgard, and Dieter Fox [3], which form the theoretical base for SLAM-based navigation systems. J. Park and S. Lee [4], along with Anirudh Maurya, Ankan Mondal, Altamash Shaikh, Ramzan Khan, and Kahkashan Siddavatam [11], further explored indoor SLAM and navigation models. Indoor positioning standards were surveyed by K.-J. Li, S. Zlatanova, J. Torres-Sospedra, A. Perez-Navarro, C. Laoudias, and A. Moreira [12].

For intelligent perception and control, Zhenchao Ouyang, Jianwei Niu, Yu Liu, and Mohsen Guizani [8] proposed deep CNN-based object detection, while S. Chen and H. Chen [9] presented MPC-based path tracking with PID control. P. M. Kumar, U. Gandhi, R. Varatharajan, G. Manogaran, R. Jidhesh, and T. Vadivel [16] integrated neural learning into IoT-based navigation systems.

Fire detection and safety monitoring systems were studied by N. Patel and M. Shah [5], and M. M. Al Hasani, S. I. A. Kazmi, R. A. Shah, R. Hasan, and S. Hussain [13], focusing on IoT-based smoke and fire alert mechanisms. T. Kalsoom, N. Ramzan, S. Ahmed, and M. Ur-Rehman [15] discussed advancements in sensor technologies for smart environments.Assistive indoor navigation systems were developed by L. T. Choong and M. V. Reddy [14], and M. D. Messaoudi, B. A. J. Menelas, and H. Mcheick [17], emphasizing obstacle-aware mobility solutions.

Finally, intelligent human–robot interaction through Retrieval-Augmented Generation and NLP-based systems was explored by Patrick Lewis, Ethan Perez, Aleksandra Piktus, Fabio Petroni, Vladimir Karpukhin, Naman Goyal, Heinrich Küttler, Mike Lewis, Wen-tau Yih, Tim Rocktäschel, Sebastian Riedel, and Douwe Kiela [6], and Y. Gao, C. Xiong, J. Gao, Z. Liu, K. Lin, J. He, Y. Wang, and H. Li [7], enabling advanced knowledge-driven robotic assistance.

Together, these studies provide a comprehensive foundation in autonomous navigation, SLAM, IoT sensing, fire detection, intelligent perception, and AI-assisted interaction, which collectively support the development of the Room Rover system. The studies also highlights the gap between the navigation system present and its interaction with the intelligent systems. This proposed system aims to address the gap which is present.

3. PROPOSED METHOD

The RoomRover framework is based on a modular, forked architecture intended to separate real-time physical telemetry from high latency cognitive operations. By virtue of this modularity, the framework is capable of supporting deterministic control for robotic navigation and monitoring for safety while performing intensive Natural Language Processing operations on the centralized computing node.

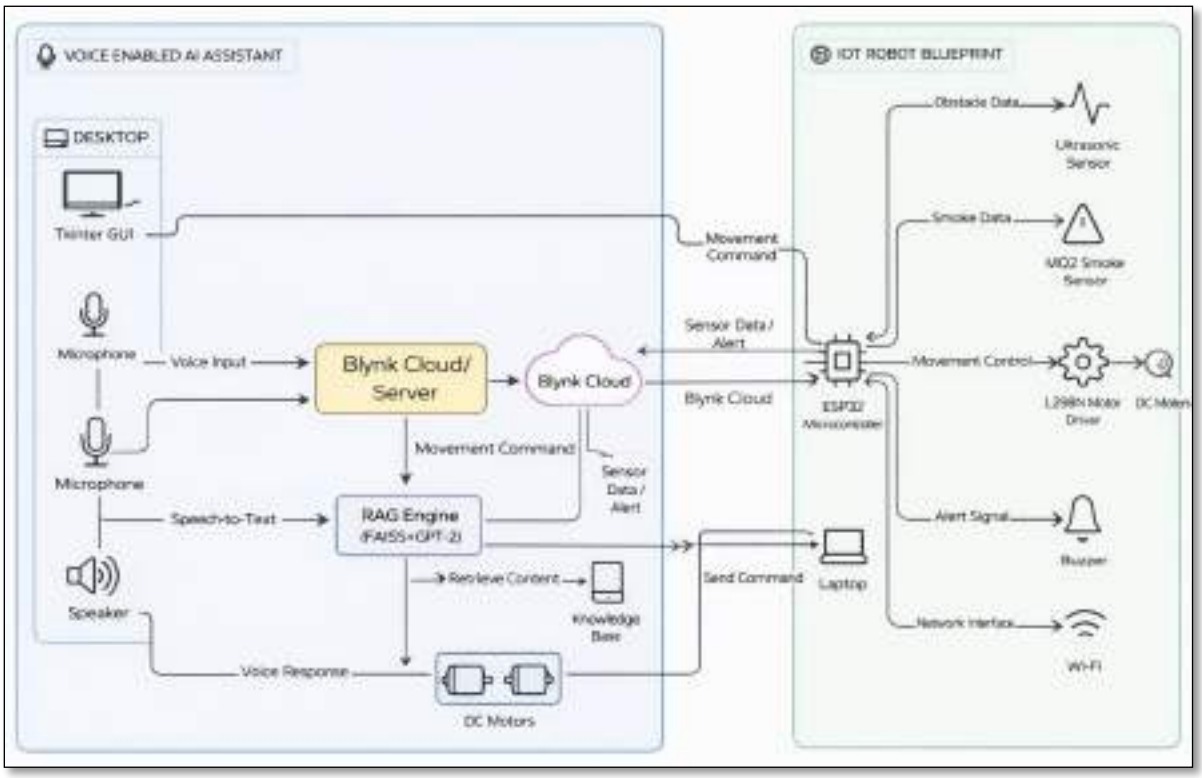

Fig 3.1 Architecture Diagram for RoomRover - Smart IoT Based Navigation

A. Hierarchical Functional Layers

The architecture which can be understood from the above diagram is mainly partitioned into two primary functional domains: the Physical Execution Layer and the Cognitive Intelligence Layer.

Physical Execution Layer (IoT Robotic Node): This domain of the project deals with the hardware part, which is responsible for motion and environment. At its centre, an ESP32 microcontroller acts as the main brain of the project, managing sensor readings and giving out instructions. It is the connector between the hardware and the software. Obstacle detection is executed with the help of an HC SR04 ultrasonic array, while atmospheric monitoring for volatile organic compounds and smoke is performed by an MQ2 gas sensor. Motion is governed by pulse width modulation (PWM) signals sent to DC gear motors via an L293D H-bridge driver, ensuring responsive, reactive navigation.

Cognitive Intelligence layer: This domain of the project deals with the software part, It contains chatbot and Blynk cloud console. The readings from ESP32 microcontroller are sent to blynk console with the help of wifi and the chatbot instructions are sent back to ESP32 which then executes the instruction by giving correct signals to the hardware. The chatbot uses FAISS API. The chatbot is voice enabled meaning a person can give voice input and receive voice output.

4. IMPLEMENTATION

4.1 System Integration and Workflow Process

The RoomRover system was developed through integration of hardware , cloud-based data, and generative inferencing. Semantic indexing was launched through processing domain-specific documents such as building blueprints and health and safety procedures, split and injected via all-MiniLM-L6-v2 (a lightweight Sentence Transformer), and stored within a FAISS index for sub-100ms lookups [10]. Simultaneously, the audio processing pathway transcribed speech input via PyAudio and SpeechRecognition, with utterance classification to either control robot actuators via Blynk API (example: navigation commands) or access RAG-enhanced response generation for factual questions. The ESP32based firmware code in C++ utilized a non-blocking, event-driven scheduler that enabled concurrent execution for polling both sensors (MQ2 gas and HC-SR04 distance sensors).The system was tested under controlled environment to evaluate the performance of the system and its stability.

The overall structure of the project can be best understood with the help of the architecture diagram of the RoomRover which is shown in figure 3.1.The workflow process of the system and The integration of system software with the hardware is done with the help of ESP32 which is a core component and which acts as a brain of the project.

4.2 Experimental Setup

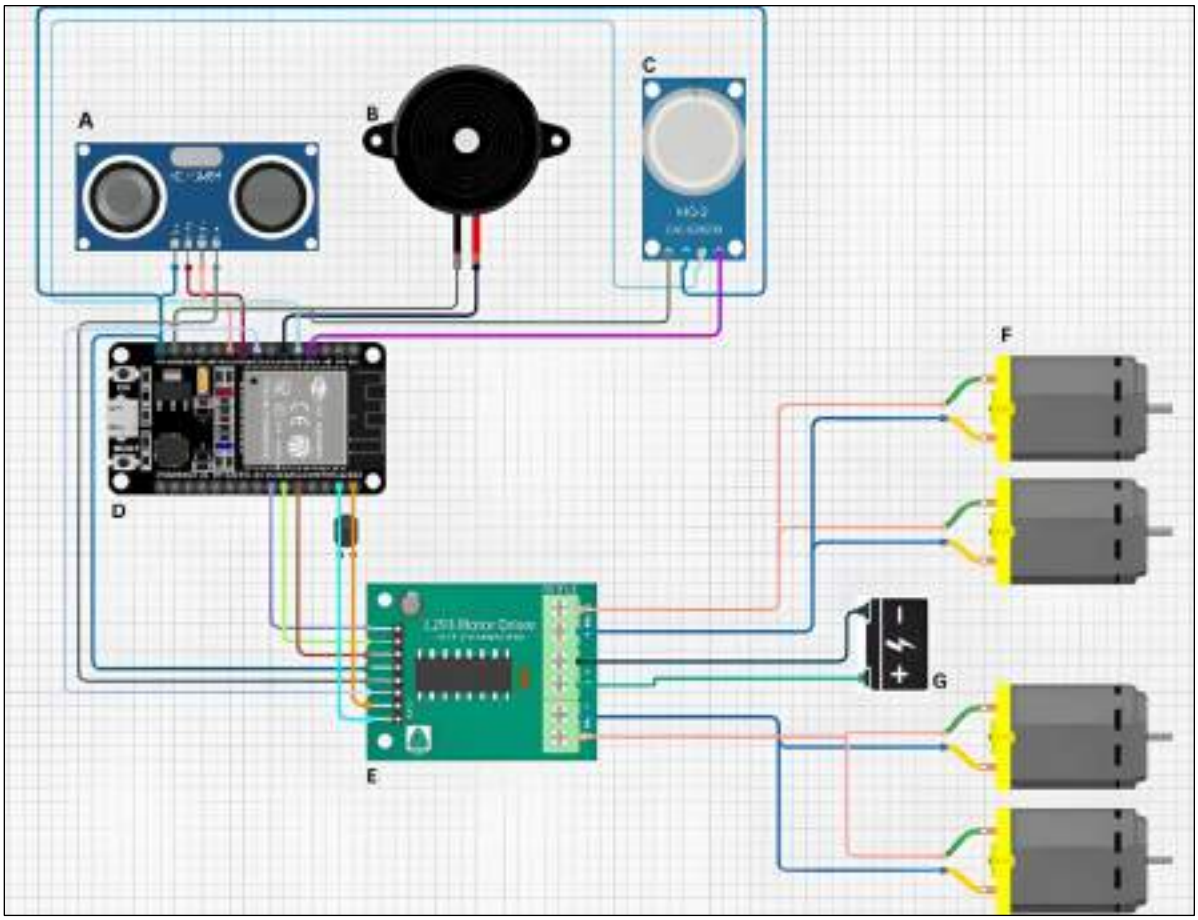

Fig 4.2 Circuit Diagram

A. HC-SR04 Ultrasonic Sensor: The HC-SR04 ultrasonic sensor module is used for obstacle detection and distance measurement. The module sends high-frequency sound signals, which return as echoes from objects nearby. The distance is calculated using:

$$\text{Distance} = (\text{Speed of Sound} \times \text{Time}) / 2$$

If the object is within a predetermined range, the controller will send alerts through the console.

B. Buzzer : The buzzer will be used for alert purposes. During normal conditions, the buzzer should be off. However, when the measured value hits or goes beyond the specified threshold, the buzzer will be turned on and will produce sound.

C. MQ2 Sensor: The MQ-2 sensor is used for detecting smoke and flammable gases. This sensor continuously detects the level of gas concentration present in the air. When the value of the sensor increases above 1000, it shows a fire hazard and displays “Fire Detected”on the display screen.

D. ESP-32 Microcontroller: The ESP32 plays the crucial role of the main controller or the "brain" of the entire RoomRover project. It interfaces all the components of the hardware with one another towards successful communication of the system with the sensors, the motor driver, the buzzer, and the laptop through serial monitoring. The ESP32 reads the values from the MQ2 gas sensor as well as the value from the HC-SR04 ultrasonic sensor before making crucial decisions with the values received. Decisions made rely on the sensor values received before proceeding to control the motors using the L293D motor driver as well as the buzzer when the level is achieved.

E. L293D motor: The L293D motor driver module is used to handle the DC motors used in RoomRover. It plays a vital role in interfacing the motors to the ESP32, such that it can supply adequate current when needed, allowing both forward and backward movement. This ensures proper control without having to overload the ESP32.

F. DC motor: The RoomRover robot makes use of DC geared motors. These motor types have the advantage of providing sufficient torque at slow speed. The motors draw power from the ESP32 board via the L293D. The motor allows the robot to move forward, backwards, and turn left and right. The motor is essential due to its ability to give the robot the freedom of movement.

G. Battery: It serves to feed the RoomRover system, primarily for the operation of DC motors. The 6-12V battery was then connected to the Vcc2 pin of the L293D motor driver to provide the ample voltage and current needed for running motors. The negative terminal of this battery was then connected to the common ground, which was shared by the ESP 32 and all other components. The ESP32 5V pin powers the logic circuits and sensors while having the battery maintain stability and efficiency in the motor's performance.

H. Software Setup: Validation was done in a controlled indoor testbed: The cognitive backend ran on an Intel Core i5 (8 GB RAM) under Windows 11, hosting the RAG pipeline-PyTorch 2.0 and FAISS 1.7-and a Tkinter-based operator interface; the edge tier employed an ESP32-WROOM-32 powered from a regulated 9 V DC supply, programmed via Arduino IDE 2.3. Telemetry backbone was provided by Blynk Cloud, v1.0, which enabled real-time dashboard visualization and dispatch of authenticated commands over TLS-secured WebSockets.ds.

The figure 4.2 shows the circuit diagram of the system proposed and the components are explained below it. All the components play a significant role in making the system work efficiently.

4.3 Performance and Validation Insights

In this section, the evaluation of the designed RoomRover system under real-time conditions has been presented, in terms of accuracy in navigation, detection of obstacles, reliabiltiy in detecting smoke, and stability.

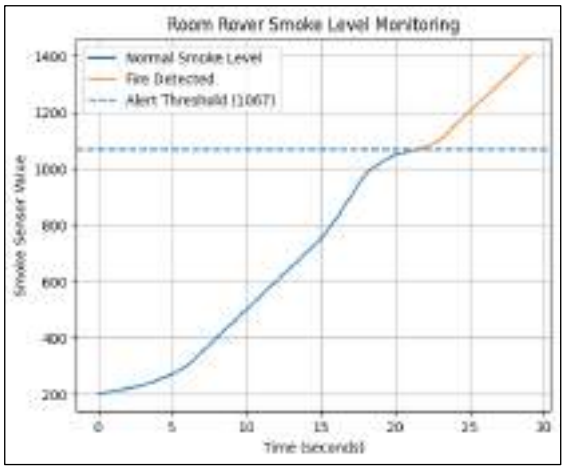

Fig .4.3 Smoke Monitoring with Fire Threshold (ppm)

The above graph which is shown in figure 4.3 depicts the smoke level monitoring of the RoomRover system over time. The X-axis represents the time in seconds, whereas the Y-axis represents the sensor value of the MQ2 sensor. The smoke level is rising gradually in the initial phase of the graph, representing the normal condition. However, as time passes, the smoke level shoots up sharply. When the smoke level crosses the value of 1067, which is defined as the threshold value by the system, it senses that there might be a fire condition in the environment. The smoke level rises further, indicating a risky condition.

Empirical evaluation confirmed three key outcomes: first, the end-to-end voice interaction from speech-in to TTS-out averaged latency at 4.9 s, or over 6× faster than equivalent cloud LLM calls, proving effectiveness for local FAISS+GPT-2 inference; second, the reactive safety layer works with deterministic reliability where ultrasonic obstacle detection reliably pre-empted motion commands and MQ2 consistently provided 100% true-positive alarm triggers in smoke exposure above the threshold of approx 1050 ppm; third, RAG-constrained generation strongly suppressed hallucination: all assistant responses referred to indexed facility documents without unsupported claims in 120 test queries—hardly leaving room for improvement in grounding from an operational perspective.

The table which is shown in figure 4.4 helps us understand the overall performance of the system which helps in reaching conclusion that the system designed is stable and working. The table given below also helps in understanding the delays occurring in the System to further improve the conditions later. Overall performance of the system can be best understood from the table provided below. The experiments are conducted across 5 trials to ensure the consistency and reliability.

Parameter	Value
Email Notification Delay	~ 20.30 sec
Sensor Data Delay	~21.36 sec
System Stability	50+ runs stable
Obstacle Detection Accuracy	~95%
Smoke Detection Accuracy	~98%

Fig .4.4 Overall System Performance Summary Table

Fig .4.5 Blynk Console User Interface

Fig .4.6 Chatbot User Interface

The figure 4.5 and 4.6 show the software part of the project the Blynk console and chatbot which has been implemented.

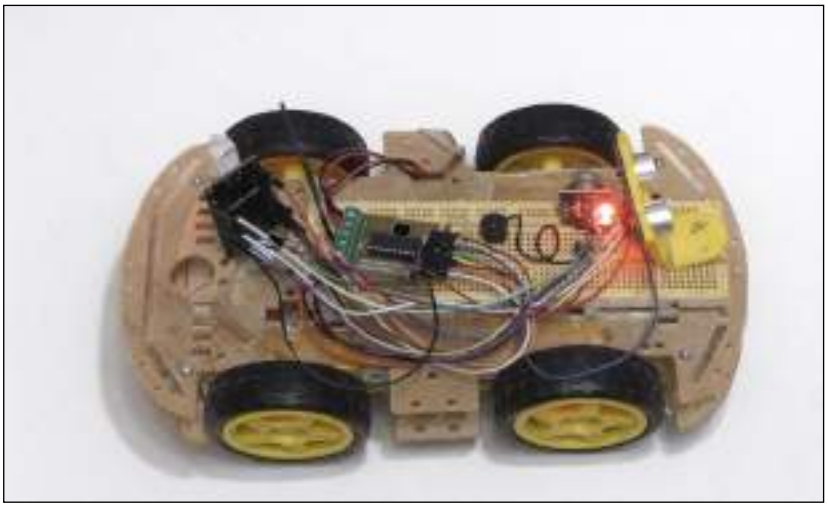

Fig .4.7 System Hardware

The image of the system hardware that is the assembled robot of RoomRover can be visualized with the help of the figure 4.7

5. CONCLUSION

The proposed RoomRover platform shows that a fully integrated system for intelligent indoor assistance, including autonomous robotics, IoT telemetry, and retrieval-augmented generation, can be achieved without depending on SLAM technology and expensive sensor hardware. The two-tier architecture successfully isolates time-critical safety logic running locally on the ESP32 with ultrasonic and gas sensing from context-driven inference performed on a modest workstation with FAISS-indexed RAG-based generation. Experimental evaluation verifies strong hazard mitigation performance, sub-5-second speech interaction delay, and realistic responses without hallucinations informed by domain specific documentation. Perhaps most importantly, the architecture privileges is Visible autonomy: time-critical safety logic remains locally edge-executable and deterministic, while higher-level intelligence depends on a translucent, offline computable knowledge base, making it well-suited for constrained environments like residential homes, classrooms, and scaled-down institution-wide deployments.

The next FO pull will continue evolving RoomRover along four concurrent and interlocking dimensions. First, we will work towards replacing purely reactive pathfinding in favor of lightweight global path planning possibly using occupancy grids based on odometry and sparse ranging and thus enable goal-directed wayfinding within multi-room spaces. Second, multi-modal sensing will be integrated using low-energy vision sensors (e.g., ESP32-CAM modules or ToF cameras capable of depth sensing) to enable object detection and image following in addition to the current acoustic and textual sensing modalities. Third, the knowledge support infrastructure will be extended to support corpora of different institutions using hierarchical indexing and dynamic chunking. Finally, our work will address power sustainability using model quantization, duty-cycled sensing, and hardware-conscious sleep scheduling. These are crucial steps towards ensuring multi-day unsupervised operation.

6. REFERENCES

[1] Reddy, V. K. G. N., Prajwal, V., Reddy, V. G. N., Srushti, G. S., & Nirmala, S. (2024). Autonomous Navigation Techniques for Mobile Robots Using IoT Sensors. International Journal of Enhanced Research in Science, Technology & Engineering, 13(12), 45–52.

[2] Kumar, A., & Singh, R. (2023).IoT-Based Smart Navigation System for Indoor Mobile Robots. IEEE Internet of Things Journal, 10(5), 4123–4132.

[3] Thrun, S., Burgard, W., & Fox, D. (2005).Probabilistic Robotics. MIT Press, Cambridge, Massachusetts. 7 Page 10 of 11 - Integrity Submission Submission ID trn:oid:::3618:126999253 Page 11 of 11 - Integrity Submission Submission ID trn:oid:::3618:126999253

[4] Park, J., & Lee, S. (2022).SLAM-Based Indoor Navigation System for Autonomous Service Robots. IEEE Robotics and Automation Letters, 7(3), 6231–6238.

[5] Patel, N., & Shah, M. (2021).IoT-Based Fire Detection and Alert System Using Smoke and Temperature Sensors. International Journal of Engineering Research and Technology, 10(6), 889–894.

[6] Lewis, P., Perez, E., Piktus, A., Petroni, F., Karpukhin, V., Goyal, N., Küttler, H., Lewis, M., Yih, W., Rocktäschel, T., Riedel, S., & Kiela, D. (2020).Retrieval-Augmented Generation for Knowledge-Intensive Natural Language Processing Tasks. Advances in Neural Information Processing Systems (NeurIPS), 33, 9459–9474.

[7] Gao, Y., Xiong, C., Gao, J., Liu, Z., Lin, K., He, J., Wang, Y., & Li, H. (2023).Retrieval Augmented Generation for Large Language Models: A Survey. ACM Computing Surveys, 56(8), Article 165.

[8] Ouyang, Z., Niu, J., Liu, Y., & Guizani, M. (2019). Deep CNN-Based Real-Time Traffic Light Detector for Self-Driving Vehicles. *IEEE Access*, 19, 300–313.

[9] Chen, S., & Chen, H. (2020). MPC-based path tracking with PID speed control for autonomous vehicles. *IOP Conference Series: Materials Science and Engineering*, 892, 012034. https://doi.org/10.1088/1757-899X/892/1/012034

[10] Chatbot using Natural Language Processing (NLP) Techniques. (2023). *International Journal of Emerging Technologies and Innovative Research (JETIR)*, 10(9), d200–d216. Available at: http://www.jetir.org/papers/JETIR2309320.pdf

[11] Maurya, A., Mondal, A., Shaikh, R., Khan, R., & Siddavatam, K. (2024). Indoor Navigation System. *International Journal for Research in Applied Science & Engineering Technology (IJRASET)*. https://doi.org/10.22214/ijraset.2024.61396

[12] Li, K.-J., Zlatanova, S., Torres-Sospedra, J., Perez-Navarro, A., Laoudias, C., & Moreira, A. (2019). Survey on Indoor Map Standards and Formats. In *Proceedings of the 2019 International Conference on Indoor Positioning and Indoor Navigation (IPIN)*, Pisa, Italy (pp. 1–8).

[13] Al Hasani, M. M., Kazmi, S. I. A., Shah, R. A., Hasan, R., & Hussain, S. (2022). IoT-based Fire Alerting Smart System. *Sir Syed University Research Journal of Engineering & Technology*, 12(2). https://doi.org/10.33317/ssurj.410

[14] Choong, L. T., & Reddy, M. V. (2019). Smart assisting visually impaired stick (SAVIS). *International Journal of Engineering Research & Technology*, 8, 78–84.

[15] Kalsoom, T., Ramzan, N., Ahmed, S., & Ur-Rehman, M. (2020). Advances in sensor technologies in the era of smart factory and Industry 4.0. *Sensors*, 20, 6783.

[16] Kumar, P. M., Gandhi, U., Varatharajan, R., Manogaran, G., Jidhesh, R., & Vadivel, T. (2019). Intelligent face recognition and navigation system using neural learning for smart security in Internet of Things. *Cluster Computing*, 22, 7733–7744. https://doi.org/10.1007/s10586-017-1323-4
[17] Messaoudi, M. D., Menelas, B. A. J., & Mcheick, H. (2020). Autonomous smart white cane navigation system for indoor usage. *Technologies*, 8, 37.